REVISIONS			
REV.	DESCRIPTION	DATE	APPROVED

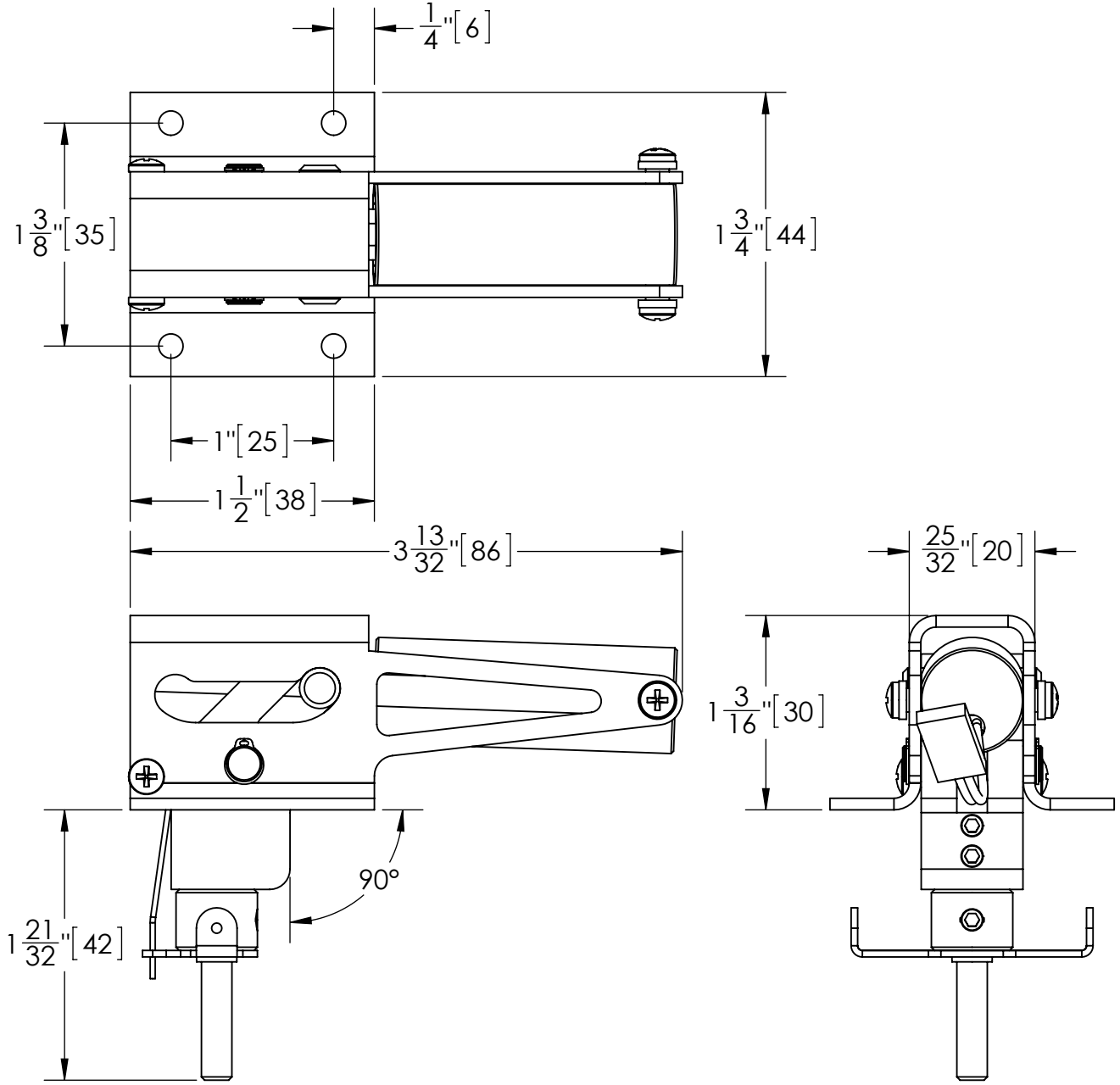

ROBART MFG

TITLE:

514 90° ELECTRIC RETRACT DIM DETAILS

PROPRIETARY AND CONFIDENTIAL	UNLESS OTHERWISE SPECIFIED:		NAME	DATE
THE INFORMATION CONTAINED IN THIS DRAWING IS THE SOLE PROPERTY OF ROBART MANUFACTURING. ANY REPRODUCTION IN PART OR AS A WHOLE WITHOUT THE WRITTEN PERMISSION OF ROBART MANUFACTURING IS PROHIBITED.	DIMENSIONS ARE IN INCHES TOLERANCES: FRACTIONAL ± 1/32 ANGULAR: MACH ± BEND ± TWO PLACE DECIMAL ±0.01 THREE PLACE DECIMAL ±0.005 FOUR PLACE DECIMAL ±0.0005	DRAWN	N.MARC	1JUL14
		CHECKED		
		MFG APPR.		
		Q.A.		

SIZE	DWG. NO.	REV
A	514RSE DIM	
SCALE: 1:1		SHEET 1 OF 1

5 4 3 2 1