THIS DRAWING ITS CONTENTS AND INFORMATION, ARE CONFIDENTIAL, AND THE PROPERTY OF ROBART MFG. INC. IT MAY NOT BE USED, COPIED, AND / OR TRANSMITTED TO ANY PERSON, FIRM, OR CORPORATION WITHOUT THE PRIOR WRITTEN APPROVAL OF ROBART MFG. INC.

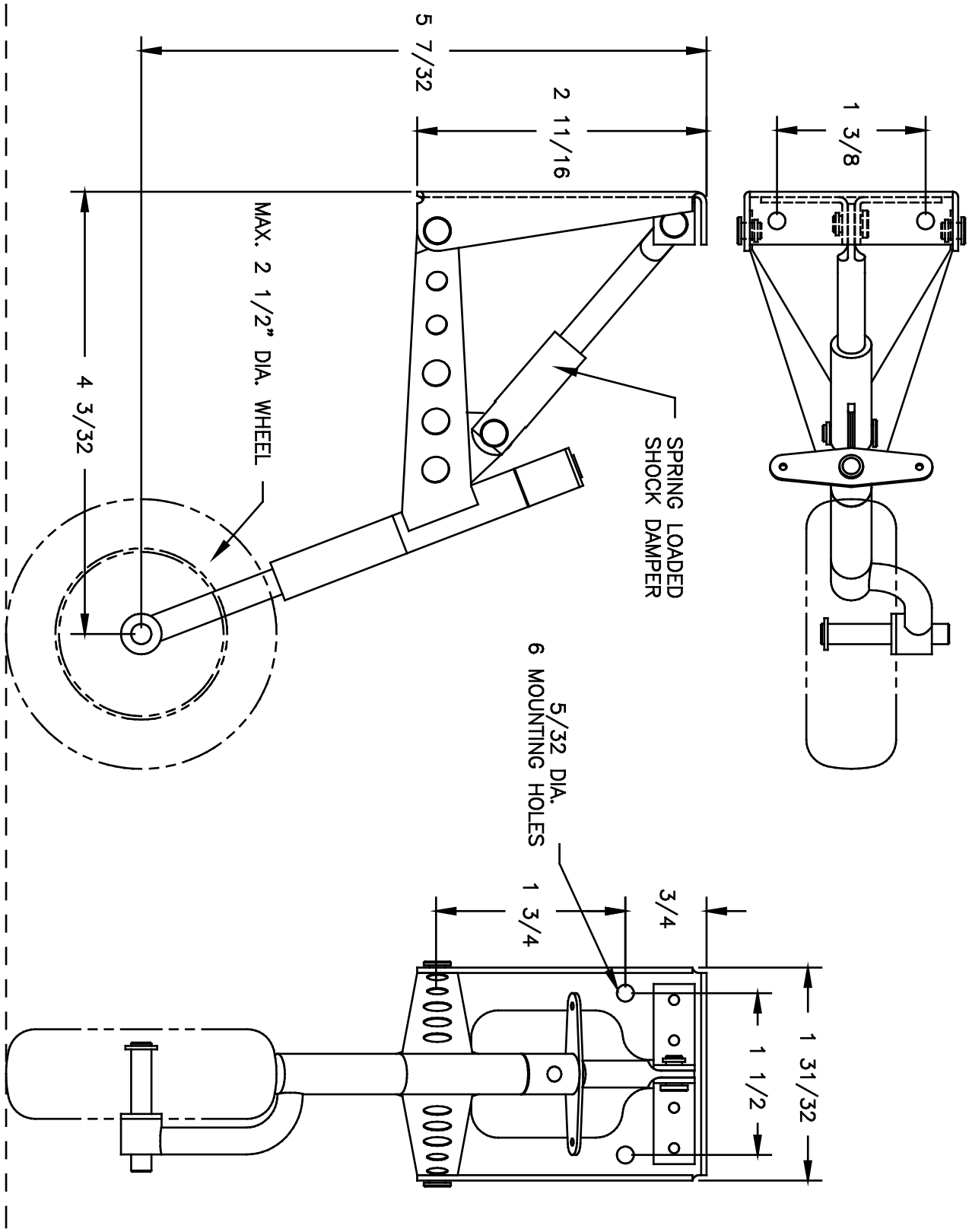

robart MFG. INC
625 N. 12th ST.
ST. CHARLES IL.

DRAWING No.	REV.
160YAT6	