SPARE PARTS LIST

QTY.	ITEM NO.	DESCRIPTION	PART NUMBER
1	1	TRUNION ASSEMBLY	158102A
1	2	ROTATION STRUT	158103A
1	3	OLEO RAM WELDMENT	158101A
1	4	LIFT YOKE ASSEMBLY	150105A
1	5	SIDE FRAME - RH	150037M
1	6	SIDE FRAME - LH	150036M
1	7	100 DEG LOWER LIFT LINK	150031M
1	8	STEERING YOKE ASSEMBLY	158106A
1	9	STEERING ARM ASSEMBLY	158105A
2	10	CENTERING SPRING	158001P
1	11	SET SCREW 6-32 X 1/8"	1060F
1	12	COMPRESSION SPRING	150019P
1	13	LIFT YOKE PIVOT PIN	150004M
1	14	CLEVIS PIN	150018M
1	15	CLEVIS PIN	150010M
2	16	CLEVIS PIN	150033M
1	17	TORQUE LINK ASSEMBLY	620112A
2	18	CLEVIS PIN	620012M
6	19	E-CLIP	1039F
2	20	#4-40 x 3/16" BHSMS	1022F
2	21	#10-32 X 1/4 BHCS	1021F
6	22	#4 X 1/4 PFHMS	1026F
2	23	2-56 X 1/4 SHCS ZINC	1083F
1	24	#2-56 x 1/2 SHCS	1055F
1	25	SPACER BRACKET	150038M
1	26	AXLE	1096F
1	27	STEERINGBRACKET	158104A
4	28	#4-40 X 1/4 TYPE 23 BHMS	1051F
1	29	150E SERIES ACTUATOR	150E108A
2	30	ACTUATOR SPACER	148E009M
2	31	#4-40 SHOULDER BOLT	1201F
1	32	#4 X 3/8 PPHSMS	1012F
1	33	STEERING PIN	158006M

906-437M

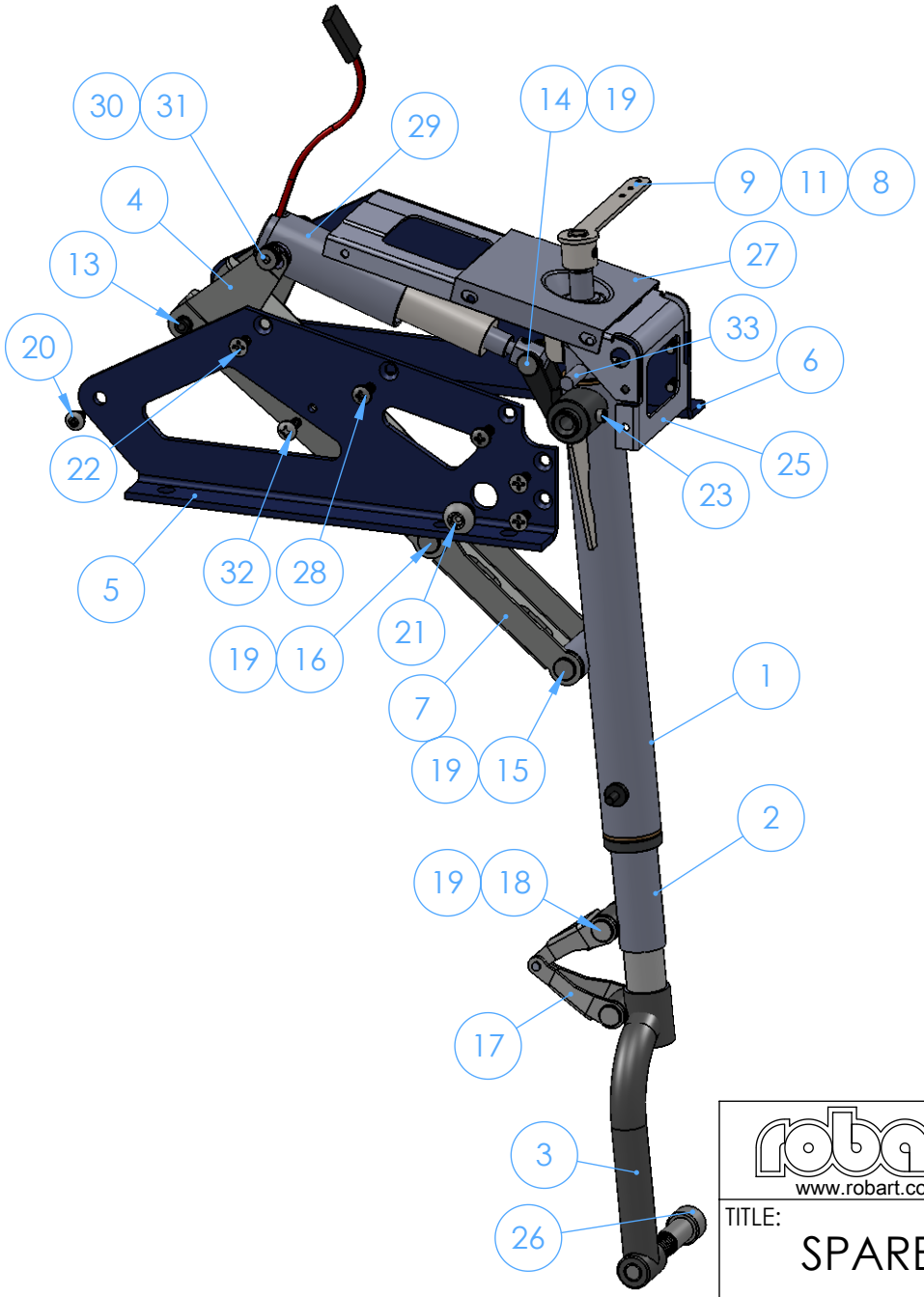

PROPRIETARY AND CONFIDENTIAL
THE INFORMATION CONTAINED IN THIS DRAWING IS THE SOLE PROPERTY OF ROBART MANUFACTURING. ANY REPRODUCTION IN PART OR AS A WHOLE WITHOUT THE WRITTEN PERMISSION OF ROBART MANUFACTURING IS PROHIBITED.

	NAME	DATE
DRAWN	J.REHAK	29OCT13
CHECKED		

robart
www.robart.com
155 OSWALT AVE.
BATAVIA, IL. 60510
PH: 630-584-7616 FX: 630-584-3712

TITLE:
SPARE PARTS LIST
158E

158ESP

REV -