REVISIONS			
REV.	DESCRIPTION	DATE	APPROVED
D	DRAWN IN SOLIDWORKS	6/7/16	NM

BILL OF MATERIALS

QTY.	ITEM NO.	DESCRIPTION	PART #
1	1	STRUT WELDMENT	660101A
1	2	OLEO RAM WELDMENT - LH	661103A
1	3	TORQUE LINK ASSEMBLY	620112A
1	4	COMPRESSION SPRING	660006P
2	5	CLEVIS PIN	620012M
2	6	E-CLIP	1039F

4 1/4" LONG SPRING

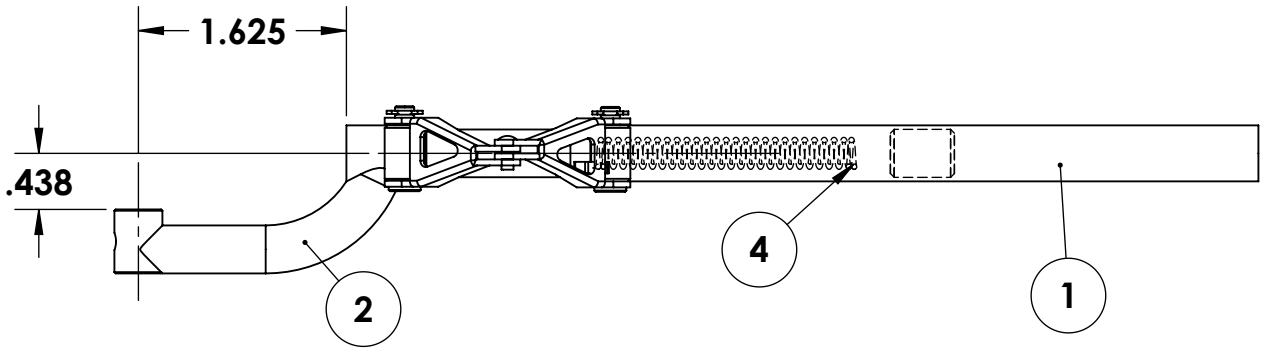

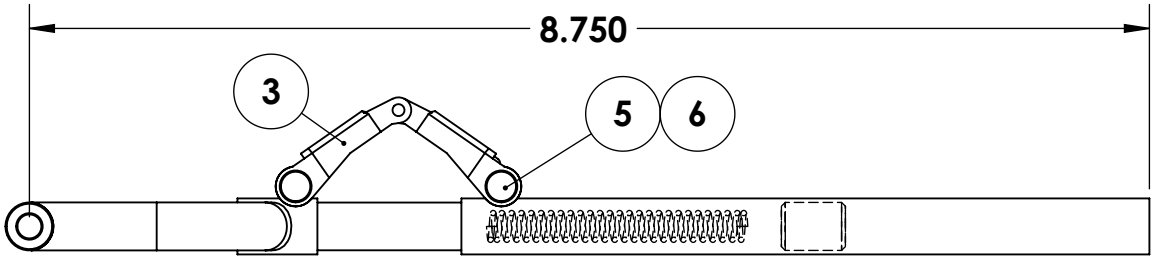

PARTS BAG ASSEMBLY: #650015A

robart MFG. INC. 155 OSWALT AVE., BATAVIA, IL 60510

TITLE:

∅ 7/16" LH OFFSET STRUT ASSEMBLY

PROPRIETARY AND CONFIDENTIAL	UNLESS OTHERWISE SPECIFIED:		NAME	DATE
THE INFORMATION CONTAINED IN THIS DRAWING IS THE SOLE PROPERTY OF ROBART MANUFACTURING. ANY REPRODUCTION IN PART OR AS A WHOLE WITHOUT THE WRITTEN PERMISSION OF ROBART MANUFACTURING IS PROHIBITED.	DIMENSIONS ARE IN INCHES TOLERANCES: FRACTIONAL ± 1/32 ANGULAR: MACH ± BEND ± TWO PLACE DECIMAL ±0.01 THREE PLACE DECIMAL ±0.005 FOUR PLACE DECIMAL ±0.0005	DRAWN	N.MARC	6/7/16
		CHECKED		
		MFG APPR.		
		Q.A.		

SIZE	DWG. NO.	REV
A	661R	D

SCALE: 2:3 | SHEET 1 OF 1

5 4 3 2 1