REVISIONS			
REV.	DESCRIPTION	DATE	APPROVED
A	DRAWN IN SOLIDWORKS	6/1/16	NM

CUT SPRING TO 8"

BILL OF MATERIALS

QTY.	ITEM NO.	DESCRIPTION	PART #
1	1	UPPER STRUT WELDMENT	622115A
1	2	OLEO RAM WELDMENT - LH	622315A
2	3	CLEVIS PIN	620012M
1	4	TORQUE LINK ASSEMBLY	620112A
1	5	COMPRESSION SPRING	150019P
2	6	E-CLIP	1039F
1	2	OLEO RAM WELDMENT - LH	622315A

STRUT ASSEMBLY - RH

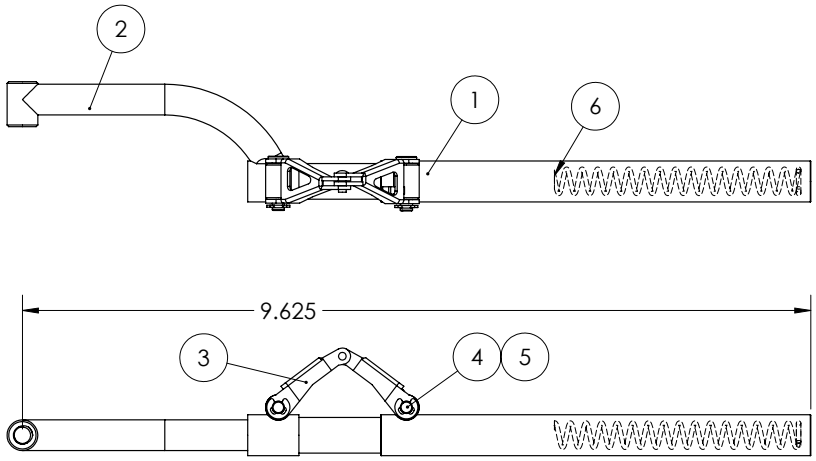

STRUT ASSEMBLY - LH

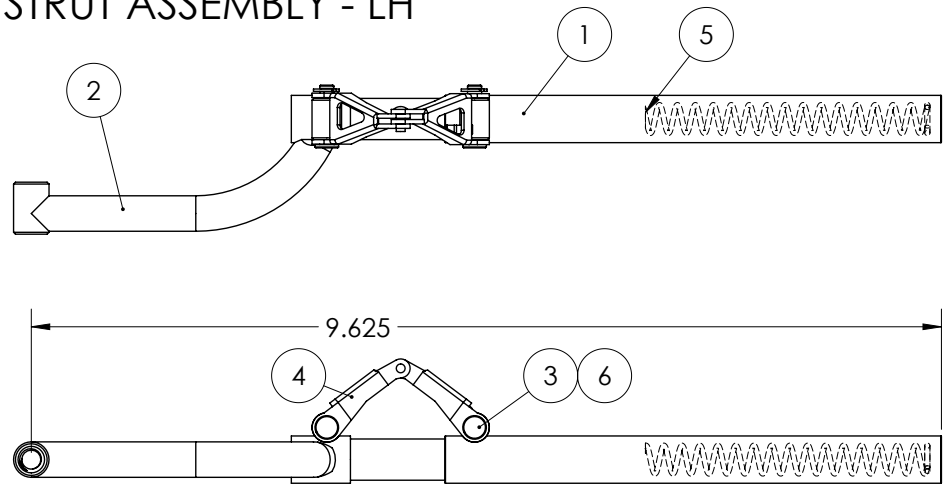

AXLE BAG ASSEMBLY - #150142A

robart MFG. INC. 155 OSWALT AVE. BATAVIA, IL 60510

TITLE:

∅1/2" FIXED OFFSET STRUT ASSEMBLY

PROPRIETARY AND CONFIDENTIAL	UNLESS OTHERWISE SPECIFIED:		NAME	DATE
THE INFORMATION CONTAINED IN THIS DRAWING IS THE SOLE PROPERTY OF ROBART MANUFACTURING. ANY REPRODUCTION IN PART OR AS A WHOLE WITHOUT THE WRITTEN PERMISSION OF ROBART MANUFACTURING IS PROHIBITED.	DIMENSIONS ARE IN INCHES TOLERANCES: FRACTIONAL ± 1/32 ANGULAR: MACH ± BEND ± TWO PLACE DECIMAL ±0.01 THREE PLACE DECIMAL ±0.005 FOUR PLACE DECIMAL ±0.0005	DRAWN	N.MARC	6/1/16
		CHECKED		
		MFG APPR.		
		Q.A.		

SIZE	DWG. NO.	REV
A	675	A
SCALE: 2:3		SHEET 1 OF 1

5 4 3 2 1